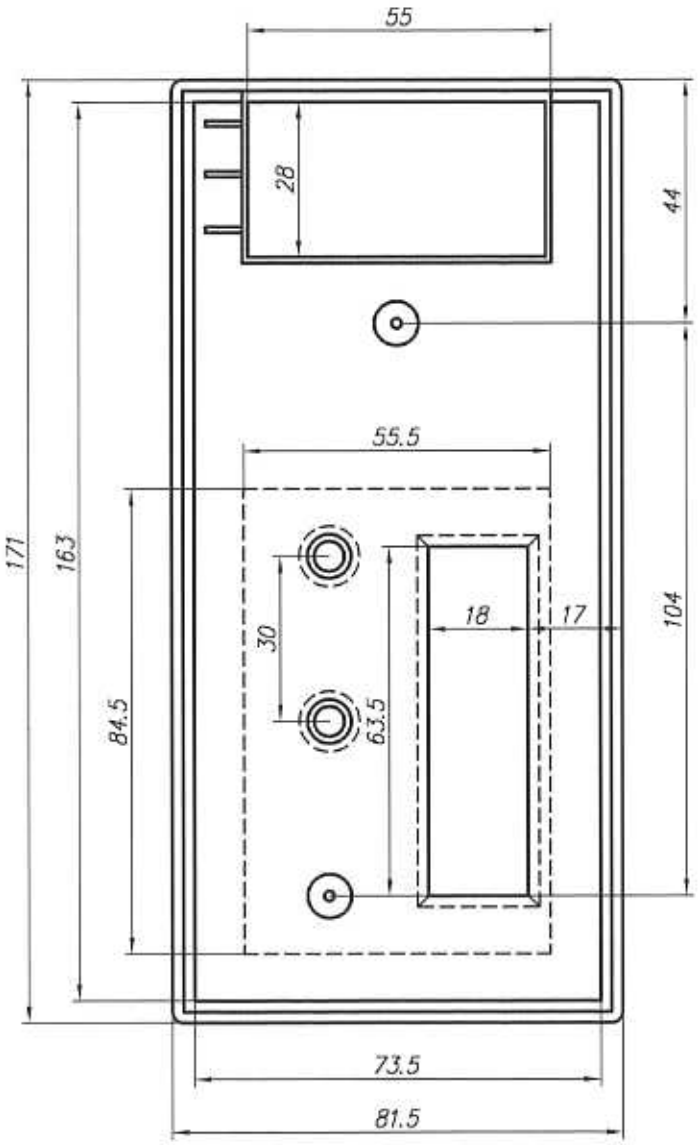
55
28
44
171
163
55.5
30
18
17
104
84.5
63.5
73.5
81.5

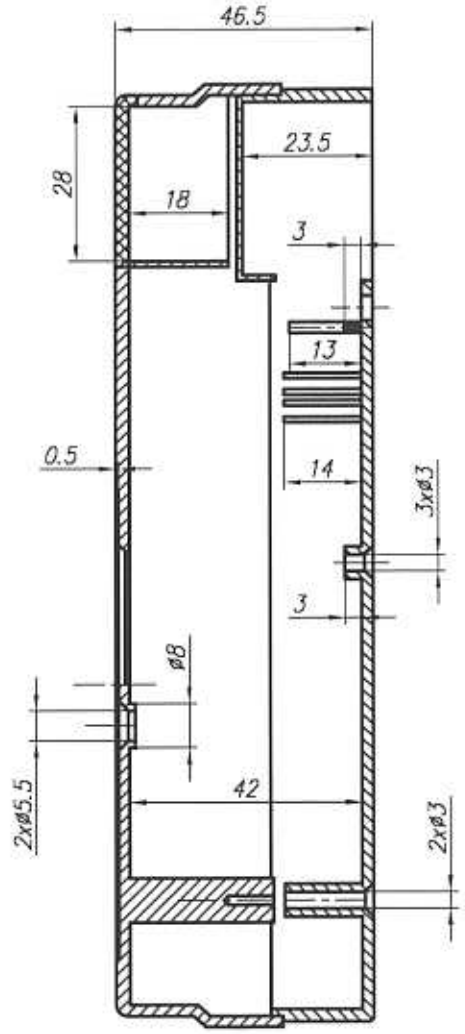
46.5
23.5
28
18
3
13
0.5
14
3x⌀3
3
⌀8
2x⌀5.5
42
2x⌀3

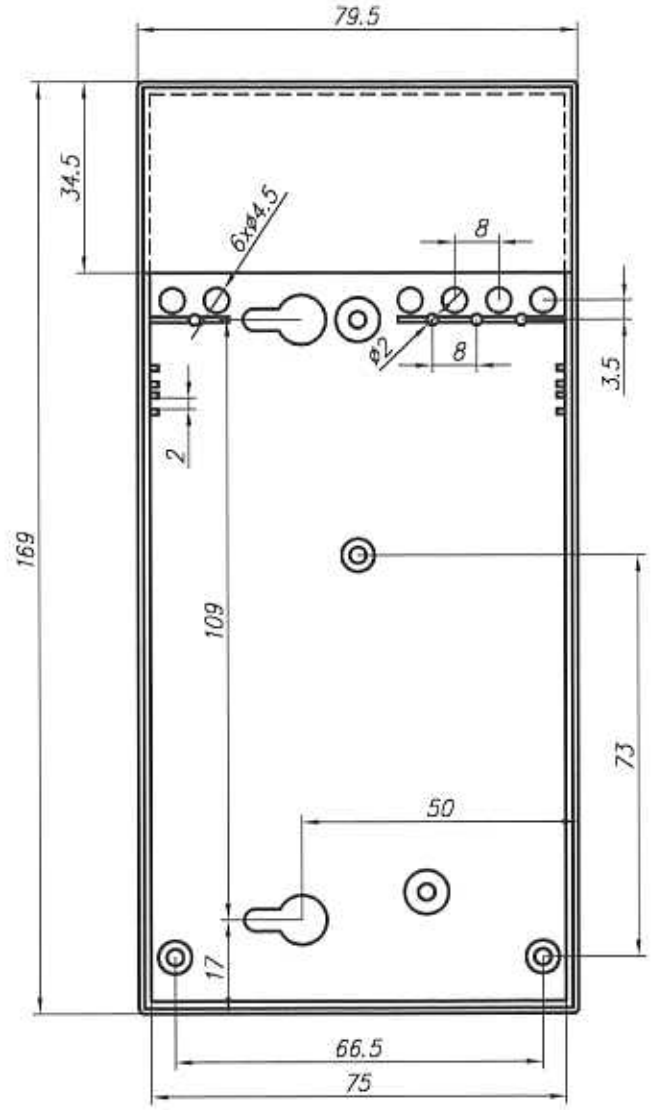
79.5
34.5
6x⌀4.5
8
⌀2
8
3.5
2
169
109
73
50
17
66.5
75

KM–51